CURRENT OUTPUT2 MODULE(NON HART)

Current output2 module board connector

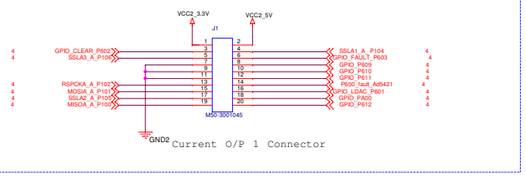

5V to 24V, 42mA boost regulator (Active supply to current output2)

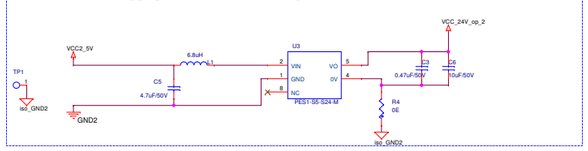

Isolated power supply in Active mode

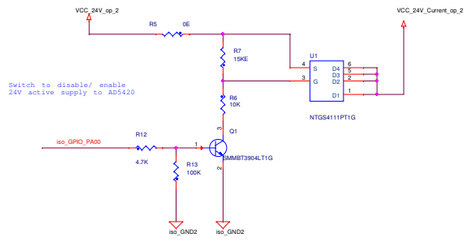

Digital isolator

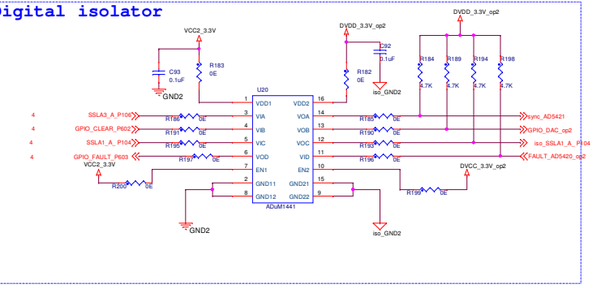

Digital isolator

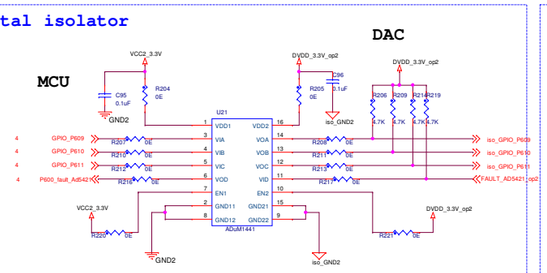

Digital isolator

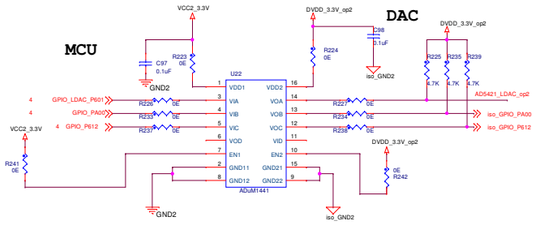

Digital isolator

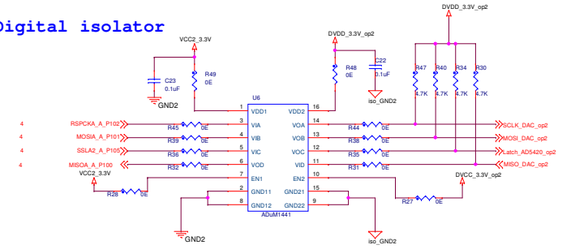

Self diagnosis ADC for current output 2

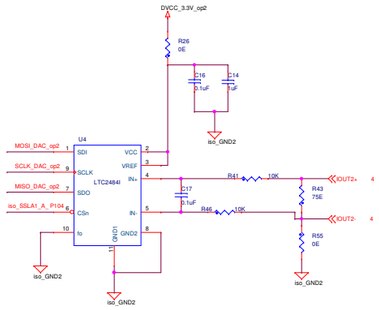

AD5420 DAC is enabled in ACTIVE mode

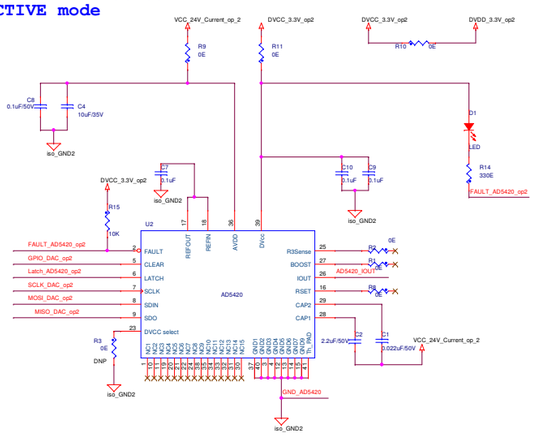

AD5421 DAC is enabled in PASSIVE mode

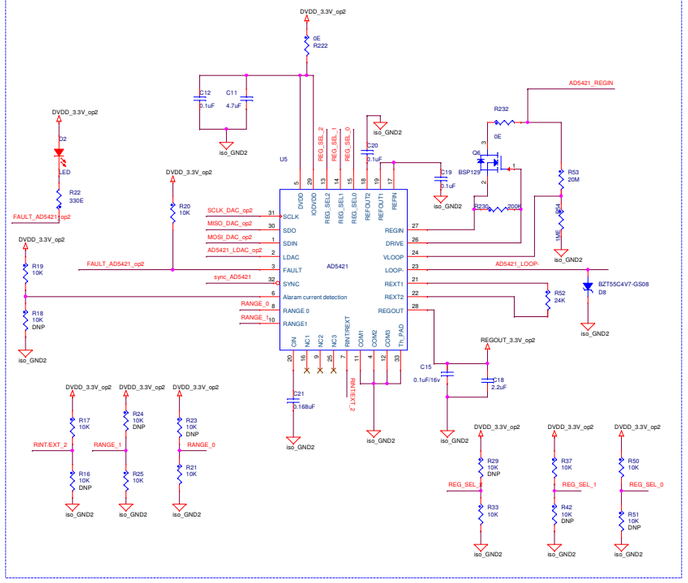

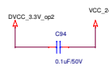

Current output 2

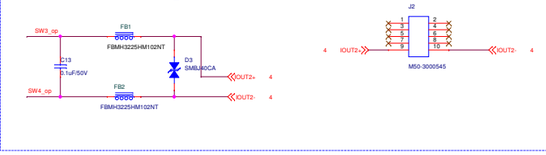

Active mode

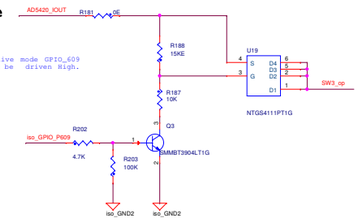

Active mode

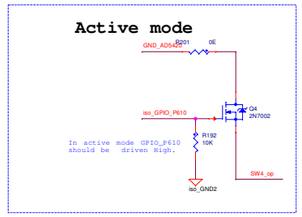

Passive mode

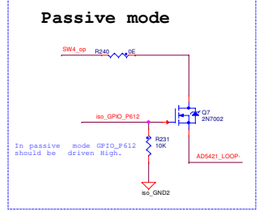

Passive mode

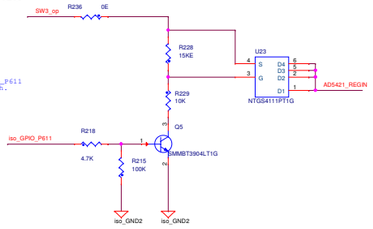

MODULE BOARD		
Title: CURRENT OUTPUT 2		
Size:	Document Number: IW-EMB59-C5-02-A-R1.0_REL1_0	Rev: 1.0
Date: Tuesday, September 11, 2018	Sheet 4 of 6	