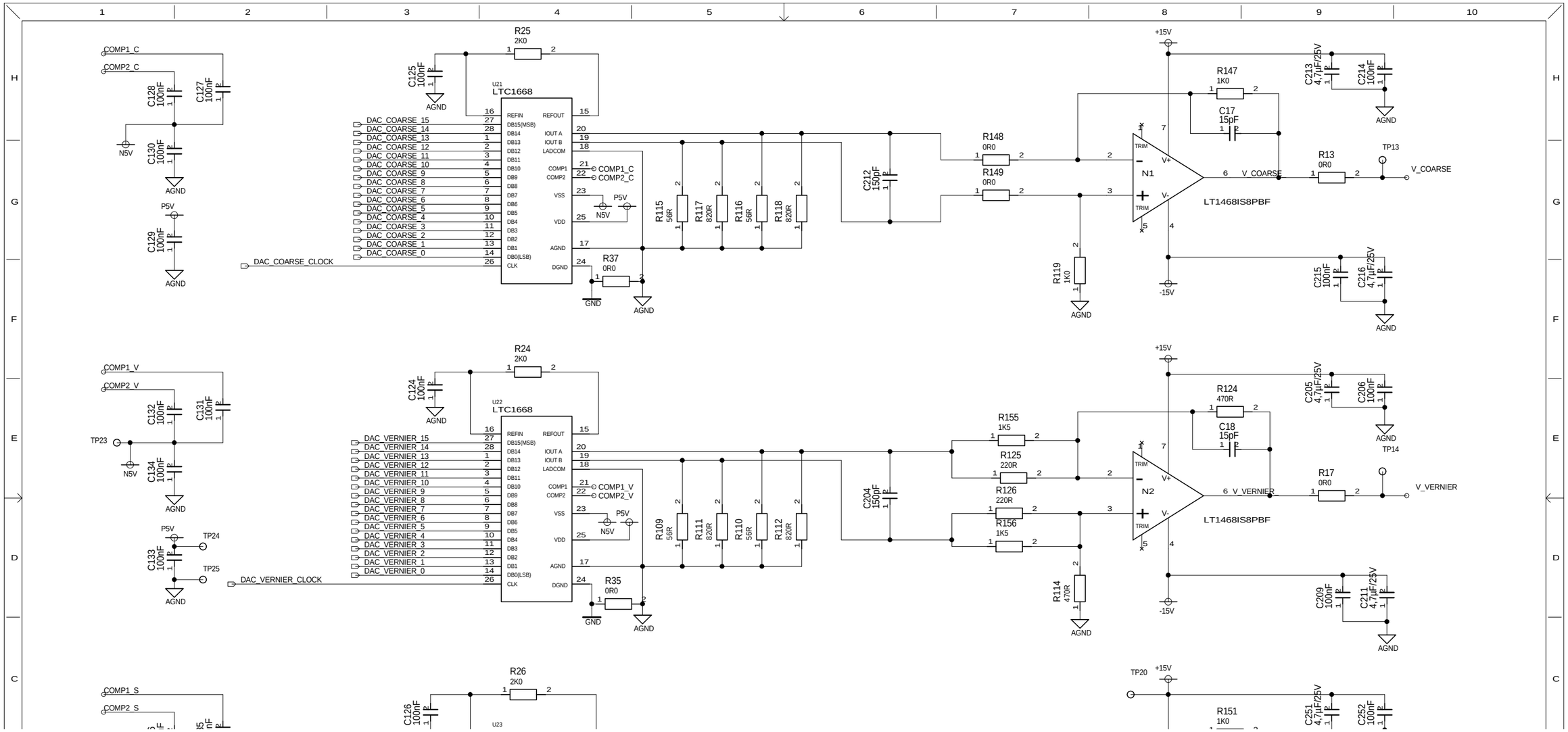
COMP1_C
COMP2_C
C128 100nF
C127 100nF
N5V
C130 100nF
AGND
P5V
C129 100nF
DAC_COARSE_CLOCK
R25 2K0
C125 100nF
U21
LTC1668
DAC_COARSE_15
DAC_COARSE_14
DAC_COARSE_13
DAC_COARSE_12
DAC_COARSE_11
DAC_COARSE_10
DAC_COARSE_9
DAC_COARSE_8
DAC_COARSE_7
DAC_COARSE_6
DAC_COARSE_5
DAC_COARSE_4
DAC_COARSE_3
DAC_COARSE_2
DAC_COARSE_1
DAC_COARSE_0
REFIN
DB15(MSB)
DB14
DB13
DB12
DB11
DB10
DB9
DB8
DB7
DB6
DB5
DB4
DB3
DB2
DB1
DB0(LSB)
CLK
REFOUT
IOUT A
IOUT B
LADCOM
COMP1
COMP2
VSS
VDD
AGND
DGND
R37 0R0
GND
R115 56R
R117 820R
R116 56R
R118 820R
C212 150pF
R148 0R0
R149 0R0
R119 1K0
+15V
-15V
R147 1K0
C17 15pF
C213 4,7µF/25V
C214 100nF
R13 0R0
TP13
V_COARSE
LT1468IS8PBF
N1
C215 100nF
C216 4,7µF/25V
COMP1_V
COMP2_V
TP23
C132 100nF
C131 100nF
C134 100nF
TP24
TP25
C133 100nF
DAC_VERNIER_CLOCK
R24 2K0
C124 100nF
U22
LTC1668
DAC_VERNIER_15
DAC_VERNIER_14
DAC_VERNIER_13
DAC_VERNIER_12
DAC_VERNIER_11
DAC_VERNIER_10
DAC_VERNIER_9
DAC_VERNIER_8
DAC_VERNIER_7
DAC_VERNIER_6
DAC_VERNIER_5
DAC_VERNIER_4
DAC_VERNIER_3
DAC_VERNIER_2
DAC_VERNIER_1
DAC_VERNIER_0
R35 0R0
R109 56R
R111 820R
R110 56R
R112 820R
C204 150pF
R155 1K5
R125 220R
R126 220R
R156 1K5
R114 470R
R124 470R
C18 15pF
C205 4,7µF/25V
C206 100nF
TP14
R17 0R0
V_VERNIER
N2
C209 100nF
C211 4,7µF/25V
COMP1_S
COMP2_S
R26 2K0
C126 100nF
U23
TP20
R151 1K0
C251 4,7µF/25V
C252 100nF