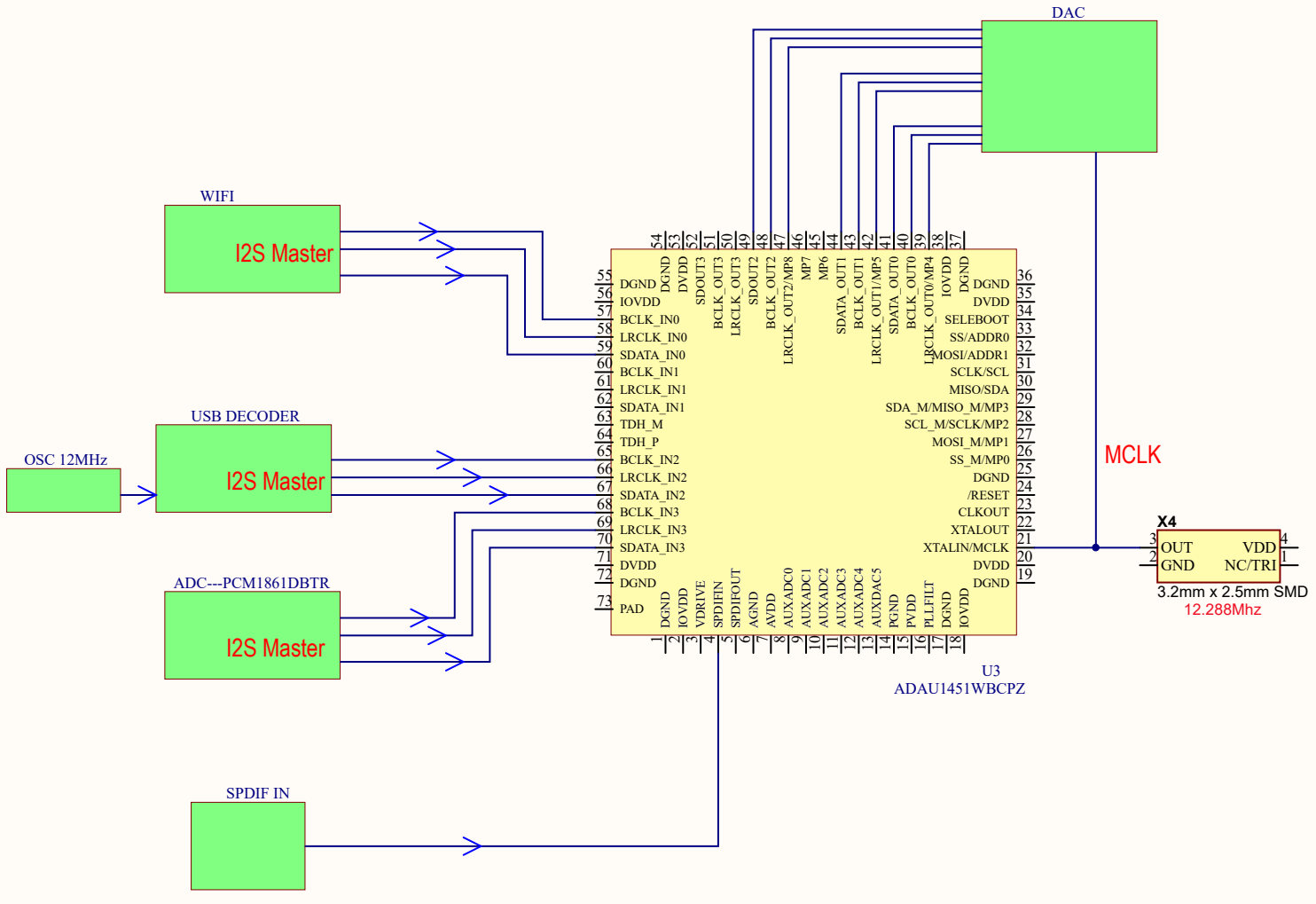

Title		
Size A	Number	Revision
Date: 2019/11/26	Sheet of	
File: D:\work\CHOI_AEROSYSTEM\Sheet1.SchDoc	Drawn By:	