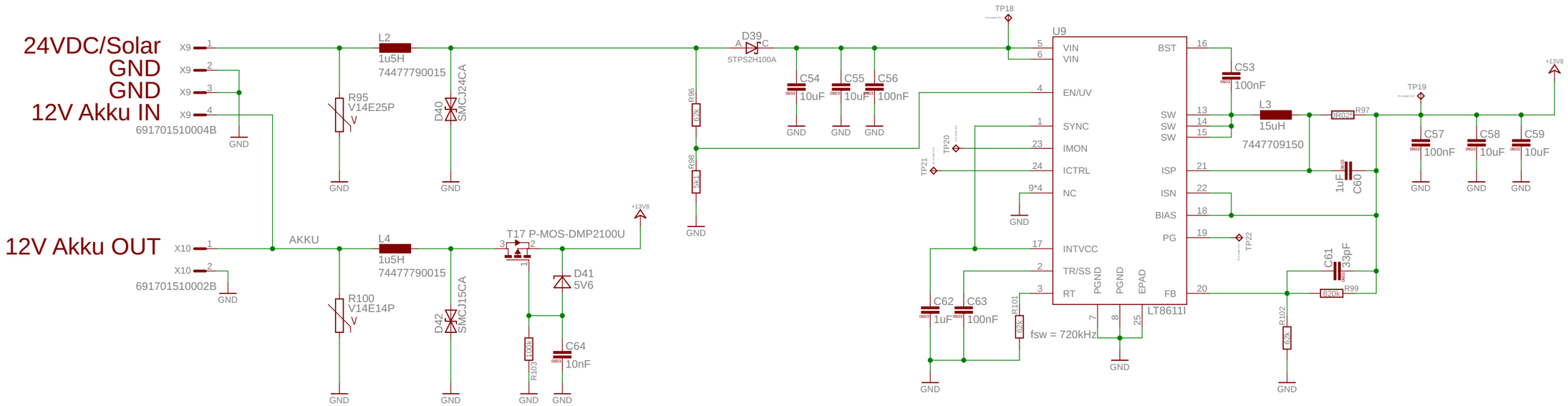
24VDC/Solar
GND
GND
12V Akku IN
691701510004B
12V Akku OUT
691701510002B
AKKU
L2
1u5H
74477790015
L4
1u5H
74477790015
R95
V14E25P
R100
V14E14P
D40
SMCJ24CA
D42
SMCJ15CA
T17 P-MOS-DMP2100U
D41
5V6
C64
10nF
R103
100k
R96
R98
5k6
D39
STPS2H100A
C54
10uF
C55
10uF
C56
100nF
TP18
U9
VIN
EN/UV
SYNC
IMON
ICTRL
NC
INTVCC
TR/SS
RT
BST
SW
ISP
ISN
BIAS
PG
FB
PGND
EPAD
LT8611I
C53
100nF
L3
15uH
7447709150
R025
R97
TP19
C57
100nF
C58
10uF
C59
10uF
+13V8
C60
1uF
C61
33pF
R99
820k
R102
62k
TP22
C62
1uF
C63
100nF
R101
62k
fsw = 720kHz
TP20
TP21
GND

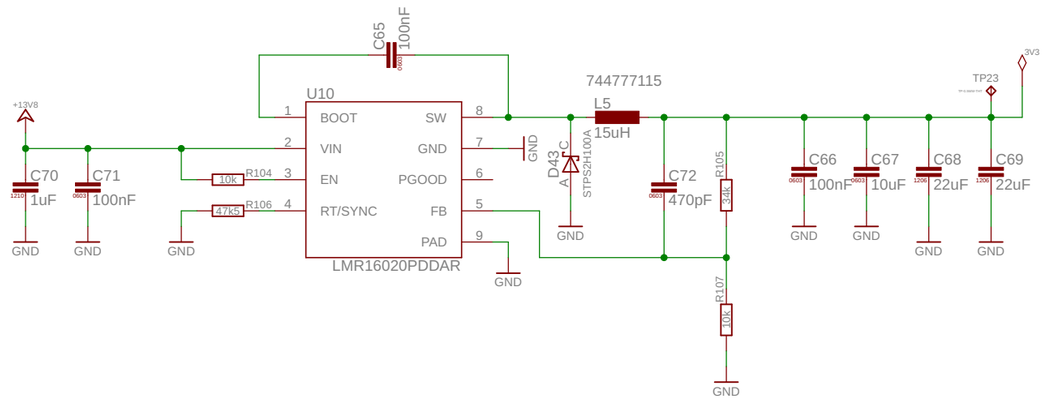
C65
100nF
U10
BOOT
VIN
EN
RT/SYNC
SW
GND
PGOOD
FB
PAD
LMR16020PDDAR
+13V8
C70
1uF
C71
100nF
R104
10k
R106
47k5
744777115
L5
15uH
D43
STPS2H100A
C72
470pF
R105
243k
R107
10k
C66
100nF
C67
10uF
C68
22uF
C69
22uF
TP23
3V3
GND