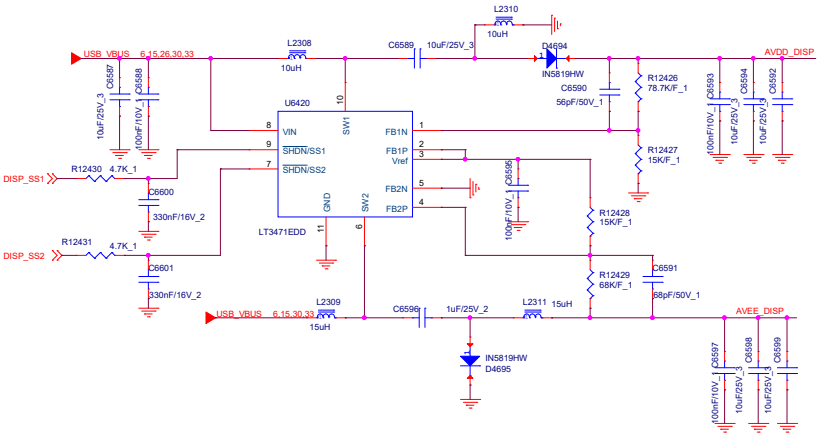
USB_VBUS 6,15,26,30,33
L2308
10uH
C6589
10uF/25V_3
L2310
10uH
D4694
IN5819HW
AVDD_DISP
C6587
10uF/25V_3
C6588
100nF/10V_1
U6420
VIN
SHDN/SS1
SHDN/SS2
SW1
GND
SW2
FB1N
FB1P
Vref
FB2N
FB2P
LT3471EDD
C6590
56pF/50V_1
R12426
78.7K/F_1
R12427
15K/F_1
C6593
100nF/10V_1
C6594
10uF/25V_3
C6592
10uF/25V_3
DISP_SS1
R12430
4.7K_1
C6600
330nF/16V_2
DISP_SS2
R12431
4.7K_1
C6601
330nF/16V_2
C6595
100nF/10V_1
R12428
15K/F_1
R12429
68K/F_1
C6591
68pF/50V_1
USB_VBUS 6,15,30,33
L2309
15uH
C6596
1uF/25V_2
L2311
15uH
IN5819HW
D4695
AVEE_DISP
C6597
100nF/10V_1
C6598
10uF/25V_3
C6599
10uF/25V_3