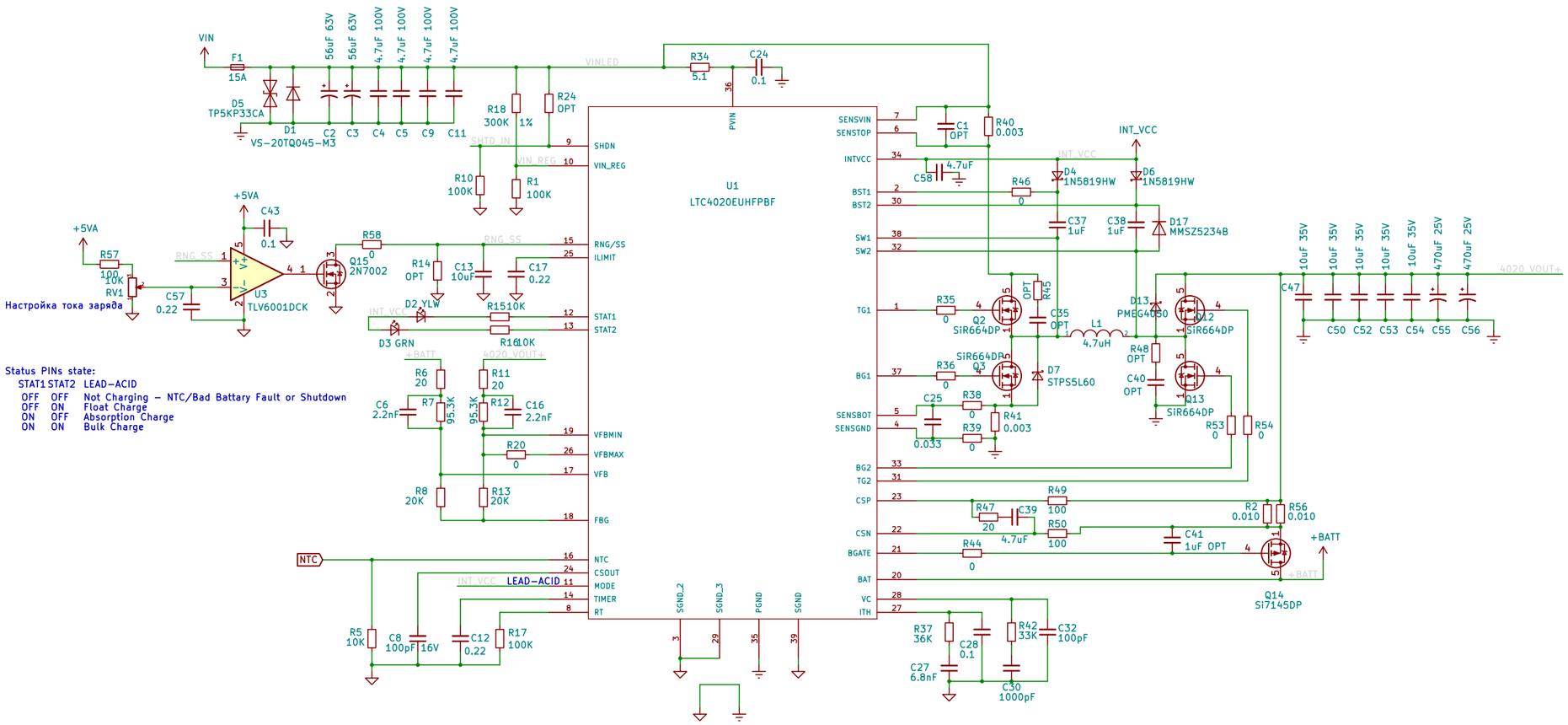

Status PINs state:

STAT1	STAT2	LEAD-ACID
OFF	OFF	Not Charging – NTC/Bad Battery Fault or Shutdown
OFF	ON	Float Charge
ON	OFF	Absorption Charge
ON	ON	Bulk Charge