VIDEO PROCESSING SMALL FORM FACTOR

ACE

Streaming H.264 video capture with Arria 10 Video & image processing platform Arria 10 development platform

Model Number: PCIe/104-A10

COLORADO ENGINEERING, Inc.

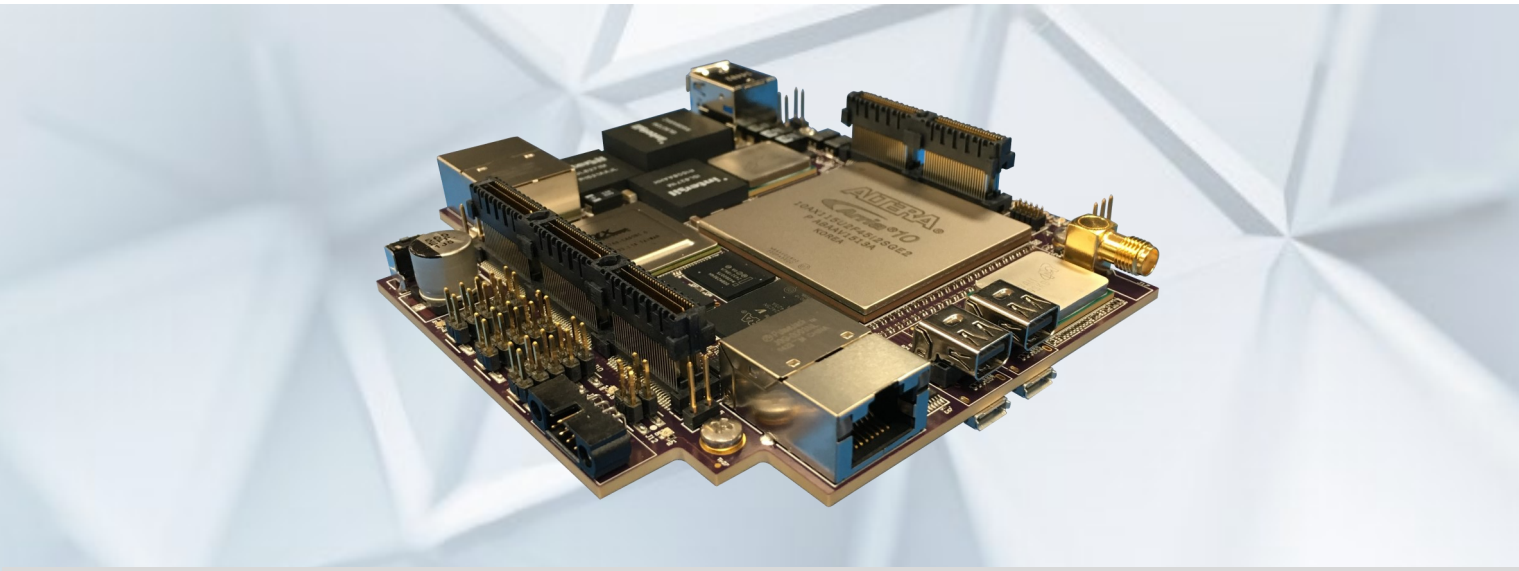

PRODUCT DESCRIPTION

The PCIe/104-A10 is CEI's newest Altera Arria 10 FPGA offering. This board offers the most advanced video and image processing in the smallest form factor available today. It is built using Altera's 10AX115 package, which features:

- 2 hard PCI Express Gen3 intellectual property (IP) blocks
- 96 Integrated transceivers with short reach rates up to 17.4 Gbps
- 1,708,800 registers, 1150K LEs, 2713 M20K memory blocks
- 1,366 GFLOPs with OpenCL™ support

PCIe/104-A10 is perfect for application development, prototyping to deployment. The module can fit into the tightest Cost, Size, Weight and Power (C-SWaP) applications or be a part of larger systems with 1, 4, 8, 16 or more channels of video inputs.

FEATURES

Key Features

- H.264 part 10 video encoding & streaming
- Fully integrated in Qsys
- All VHDL & Verilog wrappers included

- Altera Arria 10 FPGA
- 2 x8 Gen3 PCIe
- DisplayPort input & output
- 2 USB 3.0 host inputs
- Gigabit Ethernet
- Self-health monitoring
- Altera Enpirion and Intersil power supplies

Configurations

- Stand-alone
- I/O module—stack down
- 1 to N stack

Altera Video and Image Processing (VIP) Suite

- Frame reader
- Control synchronizer
- Switch
- Color space converter
- Chroma resampler
- 2D FIR filter
- Alpha blending mixer
- Scaler II: edge adaptive
- Scaler
- Broadcast deinterlacer
- Deinterlacer II
- Clipper
- Color plane sequencer
- Frame buffer
- 2D median filter
- Gamma corrector
- Clocked video input and output
- Deinterlacer
- Test pattern generator
- Avalon-ST video monitor
- Trace system

APPLICATIONS

- Video capture
- Video recording
- Video downlinking
- Image processing
- Machine vision
- Robotics
- Industrial inspection
- Arria 10 development
- HPEC with OpenCL™ research & development

Not quite sure what you need? Need a custom version? CEI is a proud member of the Altera Design Solutions Network and can tailor an Arria 10 solution for you.

intel FPGA Design Solutions Network Platinum

1915 Jamboree Dr., Colorado Springs, CO 80920 | (719)388-8582 | sales@coloradoengineering.com | www.ColoradoEngineering.com

SPECIFICATIONS

Stacking Connectors (Top and Bottom)
Two x8 PCIe Gen 3 links
SMBus
12V power

Additional Connectors (Top and Bottom)
24 FPGA LVDS lanes
4 16.0 Gbps FPGA transceiver lanes

FPGA
Altera Arria 10 (10AX115U3F45)
1150 KLE
Up to 800MHz core fabric clock speed

PCI-Express Switch
Performs PCI-Express traffic forwarding so that a PC/104 stack host can communicate with several ACE modules over the 2 x8 PCIe links

Flash Memory
1 Gb Serial Flash memory for FPGA configuration images
2 Gb parallel NOR flash memory for FPGA configuration images or user application memory

MCU
Freescale Kinetis K61 (K61P144M120SF3)
Up to 120MHz ARM Cortex-M4 core
System configuration
Power sequencing
Power monitoring
User-defined functions

CONFIGURATIONS

Model Number	Configuration
PCIE104-A10-CAPTURE	Ideal for video capture & compression, image processing
PCIE104-A10-DEV	Ideal for general Arria 10 FPGA development

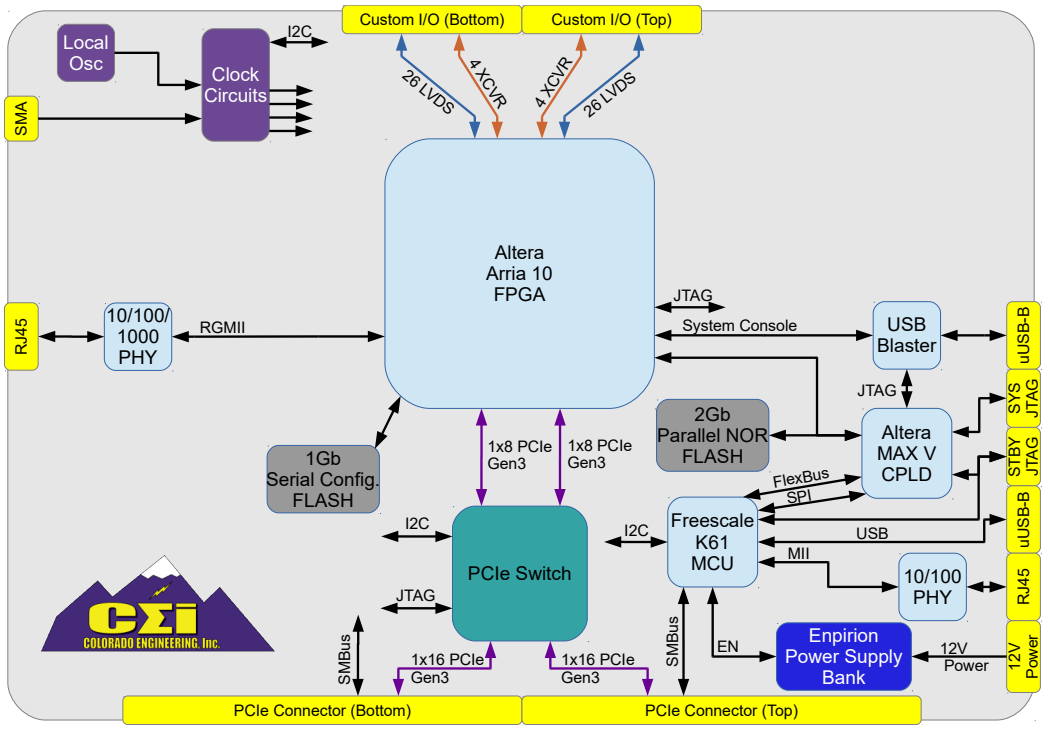

REV 3