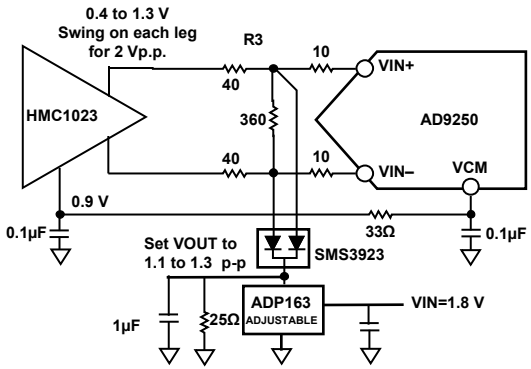
0.4 to 1.3 V
Swing on each leg
for 2 Vp.p.
R3
10
VIN+
40
HMC1023
360
AD9250
40
10
VIN–
VCM
0.9 V
0.1µF
33Ω
0.1µF
Set VOUT to
1.1 to 1.3 p-p
SMS3923
ADP163
ADJUSTABLE
VIN=1.8 V
1µF
25Ω