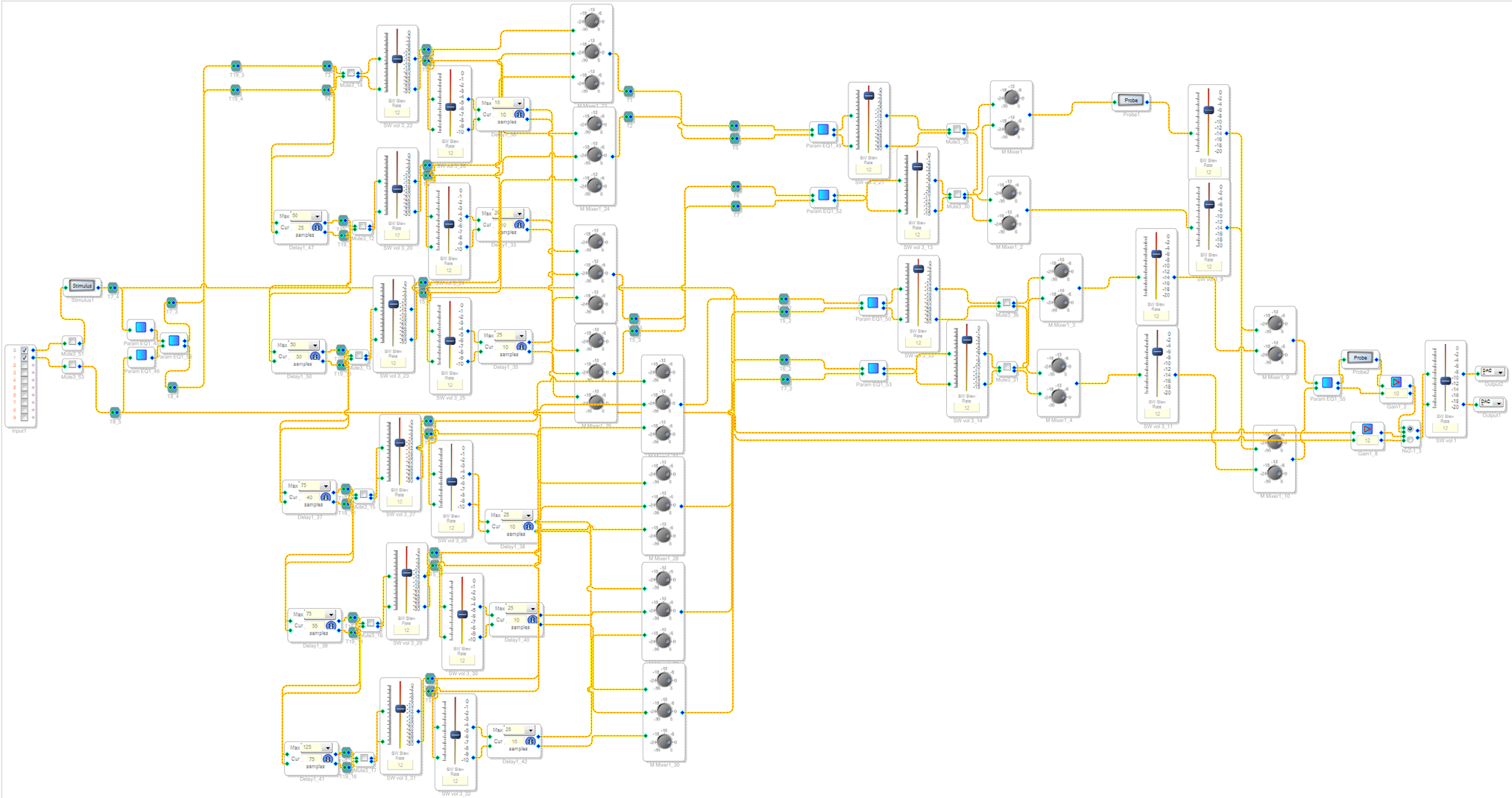
Input1
Stimulus
Stimulus1
Mute3_53
Mute3_54
Param EQ1_45
Param EQ1_46
Param EQ1_52
Param EQ1_53
Param EQ1_55
Delay1_47
Delay1_50
Delay1_37
Delay1_39
Delay1_41
Delay1_33
Delay1_35
Delay1_38
Delay1_40
Delay1_42
SW vol 3_22
SW vol 3_20
SW vol 3_23
SW vol 3_25
SW vol 3_27
SW vol 3_28
SW vol 3_29
SW vol 3_30
SW vol 3_31
SW vol 3_32
SW vol 3_24
SW vol 3_21
SW vol 3_13
SW vol 3_33
SW vol 3_14
SW vol 3_11
SW vol 1
M Mixer1_24
M Mixer1_26
M Mixer1_28
M Mixer1_30
M Mixer1
M Mixer1_2
M Mixer1_3
M Mixer1_4
M Mixer1_9
M Mixer1_10
Probe
Probe1
Probe2
Gain1_2
Gain1_8
Nz2-1_3
Output2
Output1
SPK