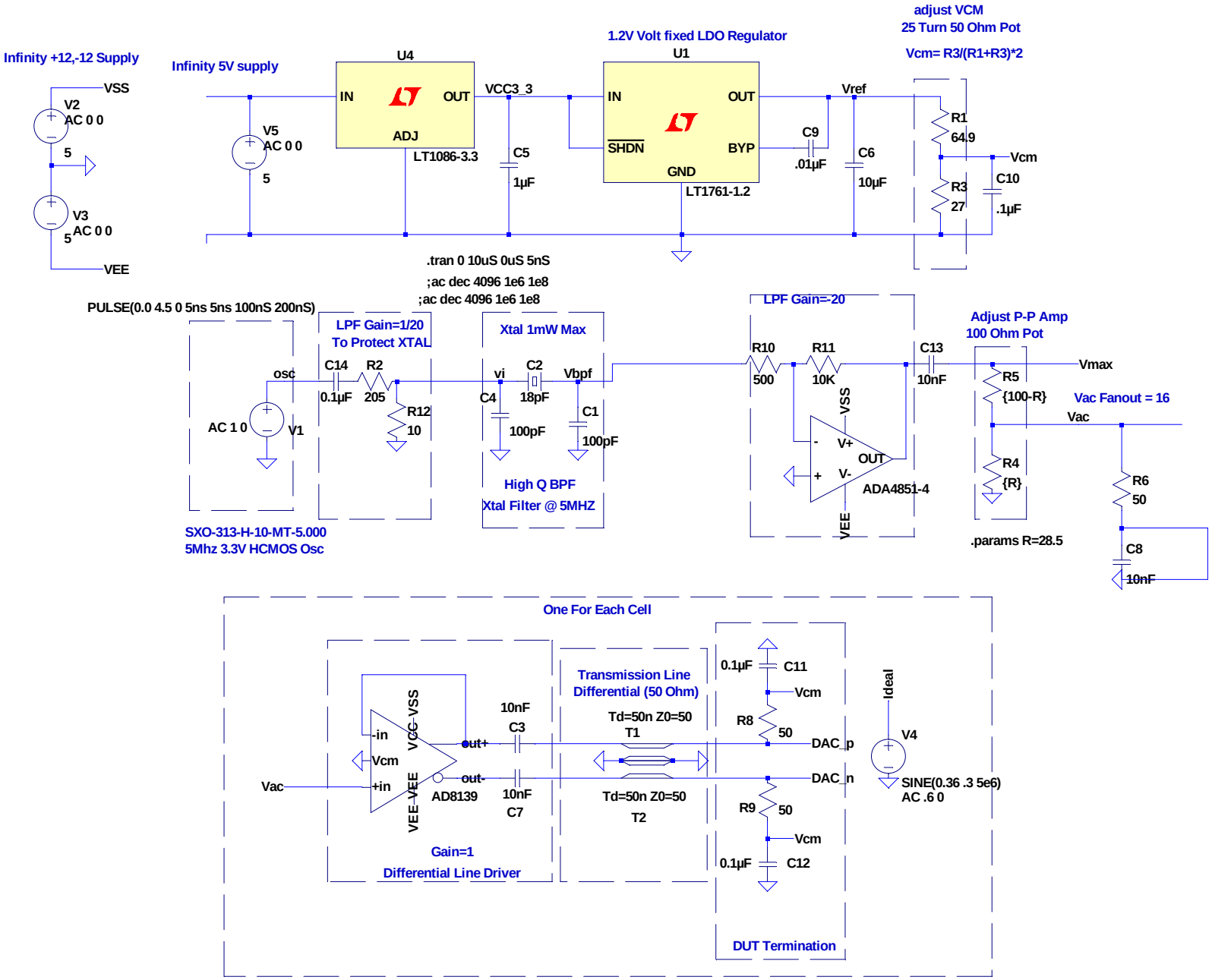

PDF Created with deskPDF PDF Writer - Trial :: http://www.docudesk.com