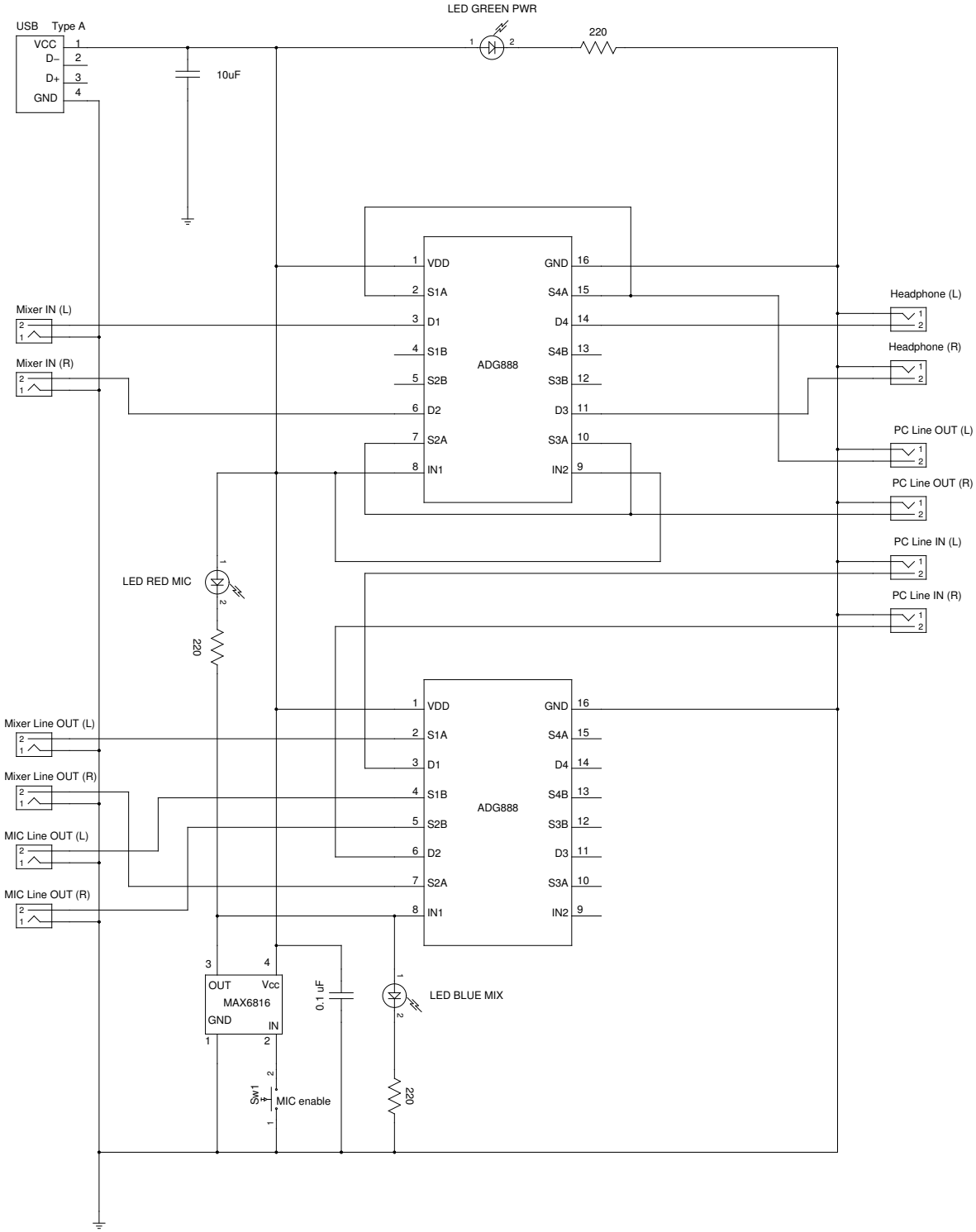
USB Type A
VCC
D−
D+
GND
10uF
LED GREEN PWR
220
ADG888
VDD
S1A
D1
S1B
S2B
D2
S2A
IN1
GND
S4A
D4
S4B
S3B
D3
S3A
IN2
Mixer IN (L)
Mixer IN (R)
Headphone (L)
Headphone (R)
PC Line OUT (L)
PC Line OUT (R)
PC Line IN (L)
PC Line IN (R)
LED RED MIC
220
Mixer Line OUT (L)
Mixer Line OUT (R)
MIC Line OUT (L)
MIC Line OUT (R)
OUT
Vcc
MAX6816
GND
IN
0.1 uF
LED BLUE MIX
Sw1
MIC enable
220