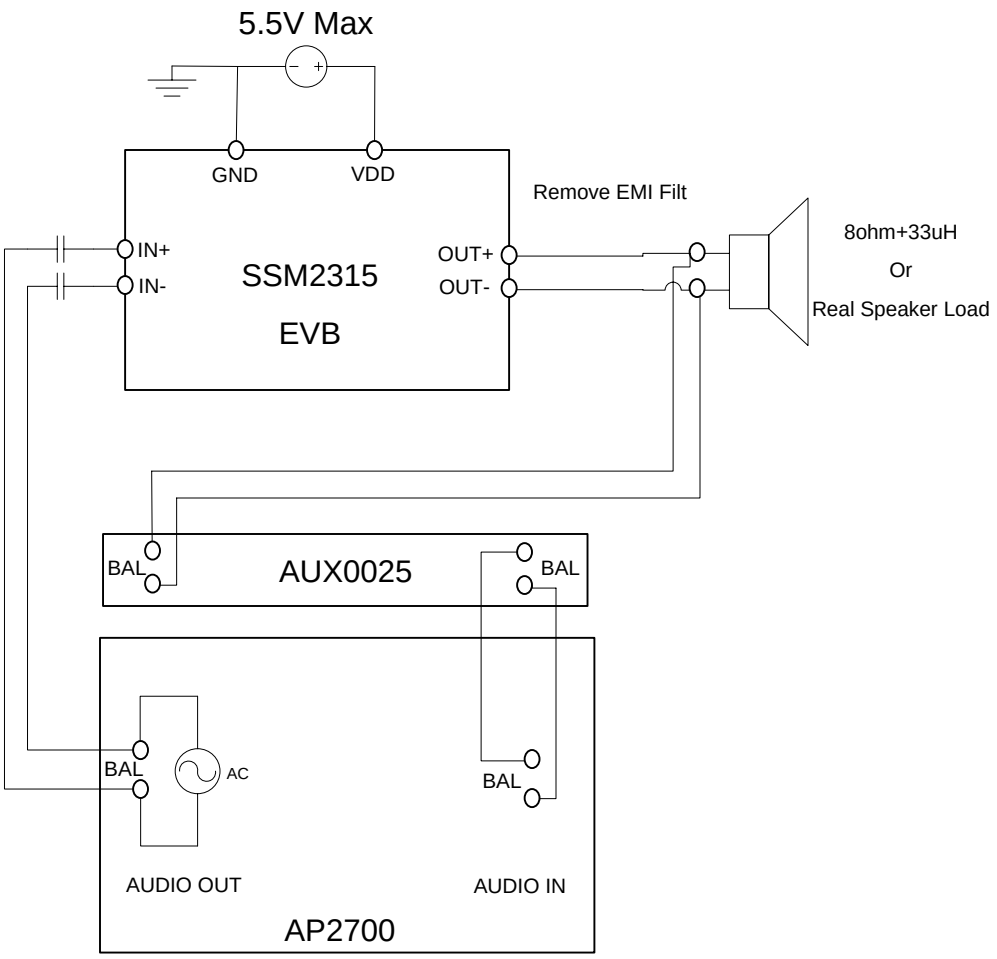
5.5V Max
GND
VDD
Remove EMI Filt
IN+
IN-
SSM2315
EVB
OUT+
OUT-
8ohm+33uH
Or
Real Speaker Load
BAL
AUX0025
BAL
BAL
AC
BAL
AUDIO OUT
AUDIO IN
AP2700