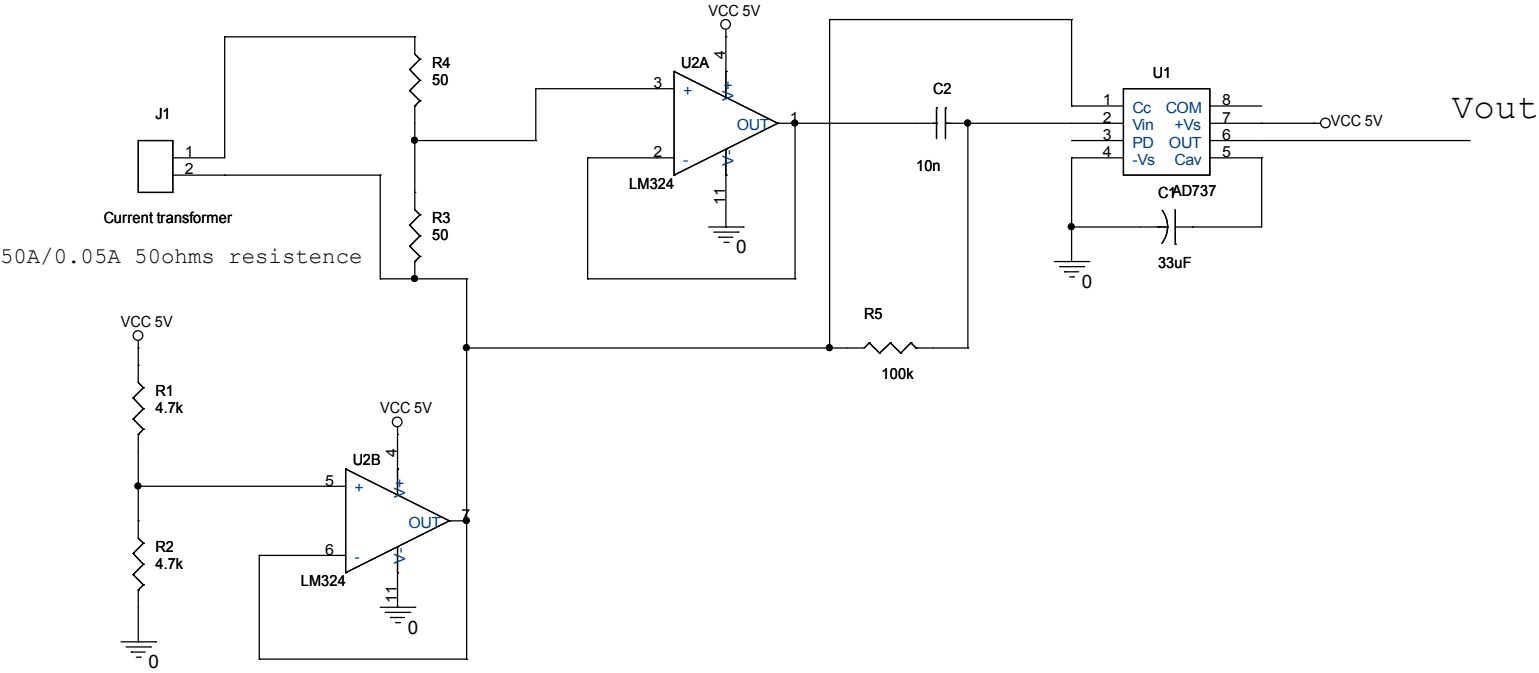

50A/0.05A 50ohms resistence