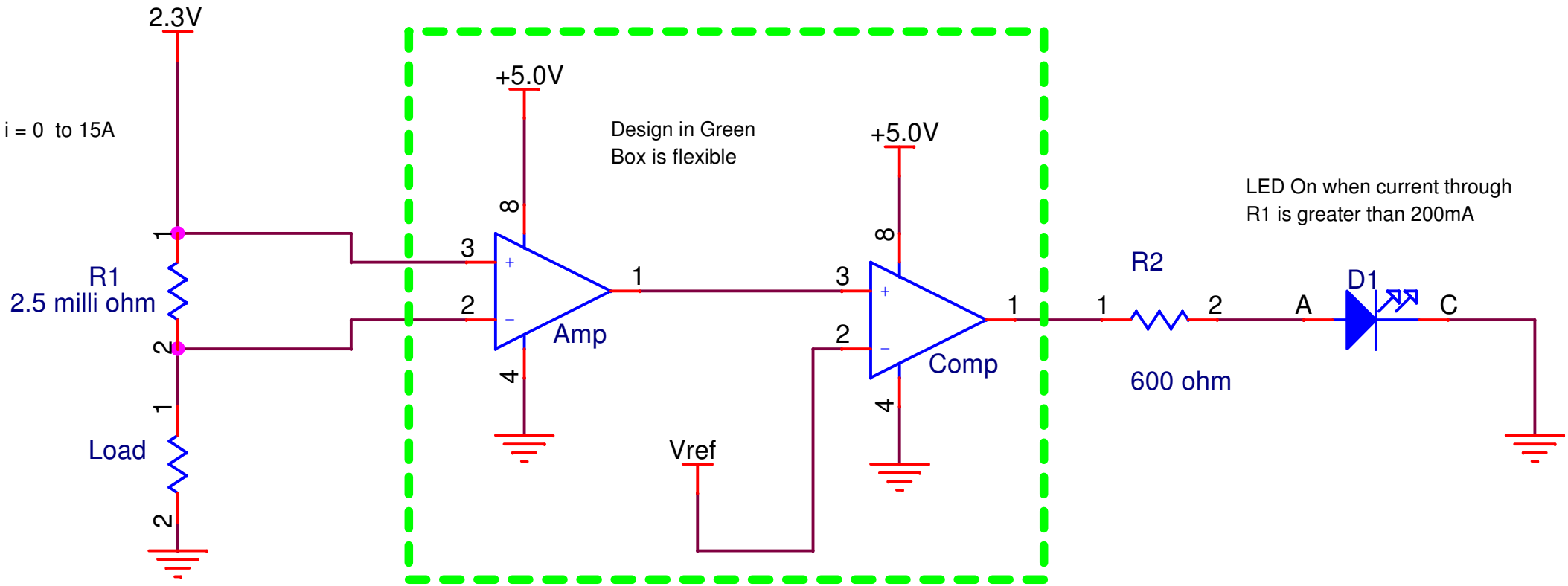
2.3V
i = 0 to 15A
R1
2.5 milli ohm
Load
+5.0V
Design in Green
Box is flexible
Amp
Comp
Vref
+5.0V
R2
600 ohm
D1
A
C
LED On when current through
R1 is greater than 200mA